486 SPREADER BEAM

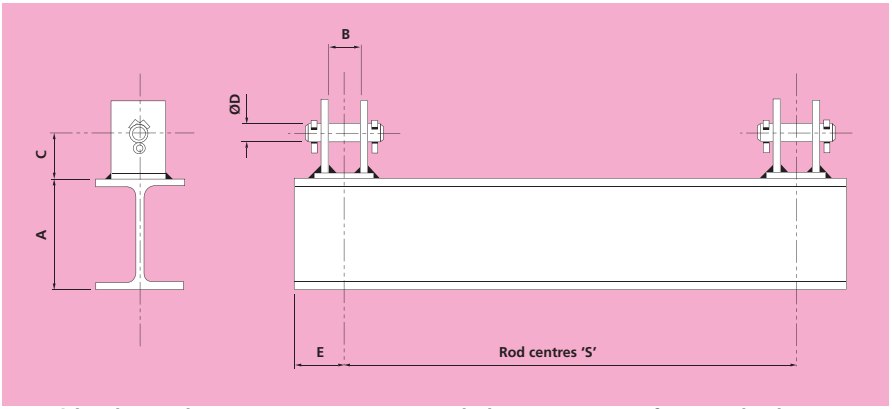

Material: Carbon Steel

Order by Part No., Beam Reference and Rod Centres "S"

PART No.	ROD DIA	LOAD CAPACITY		LOAD GROUP	B	C	D	E	WEIGHT EXCLUDING BEAM
		kg	kN		mm	mm	mm	mm	kg
F486M10	10	720	7.0	1	30	36	10	50	0.78
F486M12	12	1060	10.4	2	30	36	12	50	0.80
F486M16	16	2020	19.8	3	30	42	16	50	1.0
F486M20	20	3160	31.0	4	35	60	20	60	2.2
F486M24	24	4560	44.8	5	40	70	24	60	4.0
F486M30	30	7300	71.6	6	40	82	30	60	6.9
F486M36	36	10680	104.8	7	55	95	36	75	11.5
F486M42	42	14800	145.2	8	65	105	42	80	15.7
F486M48	48	19300	189.2	9	70	125	48	90	27.2
F486M56	56	26700	261.8	10	80	140	56	95	37.5
F486M64	64	36000	353.0	11	90	160	64	105	48.3
F486M72	72	46050	451.6	12	100	180	72	110	71.0

BEAM REFERENCE	DEPTH 'A' (NOM.) mm	WEIGHT PER METRE (NOM.) kgf
A	125	13.5
B	150	14.6
C	175	19.9
D	200	22.7
E	250	32.7
F	300	40.4
G	350	47.9
H	400	61.8
J	450	72.5
K	515	87.7
L	600	108.0

ORDER BY PART NUMBER AND ROD CENTRES 'S'

ROD DIA	LOAD CAPACITY		LOAD GROUP	BEAM REFERENCE FOR SPAN S = mm
	kgf	kN		
10	720	7.0	1	A B C
12	1060	10.4	2	A B C D
16	2020	19.8	3	A B C D E
20	3160	31.0	4	A B C D E F
24	4560	44.8	5	B C D E F G
30	7300	71.6	6	D E F G H J
36	10680	104.8	7	E F G H J K
42	14800	145.2	8	G H J K L
48	19300	189.2	9	G H J K L
56	26700	261.8	10	J K L
64	36000	353.0	11	K L
72	46050	451.6	12	L

250 500 750 1000 1250 1500 1750 2000 2250 2500 2750 3000